Memory Technology And Neuromorphic Computing

EE687A Project Presentation

PUFs implemented with Analog behaviour of SRAM

By :
N Bhuvan (190521)
Priyanka Hembram (22104075)
Vaibhav Bajpai (190934)

Under Assistant Professor:
Dr. Shubham Sahay

Security and Hardware Based Security

- Physical Unclonable Functions (PUFs) have emerged as new hardware security primitives that can fill up some of the security holes that have showed up in the vastly connected world.
- PUFs have established a foothold in various security applications due to their natural resistance to hardware probing along with their small implementation area.
- Also PUFs when used for hardware are better for power consumption compared to software.

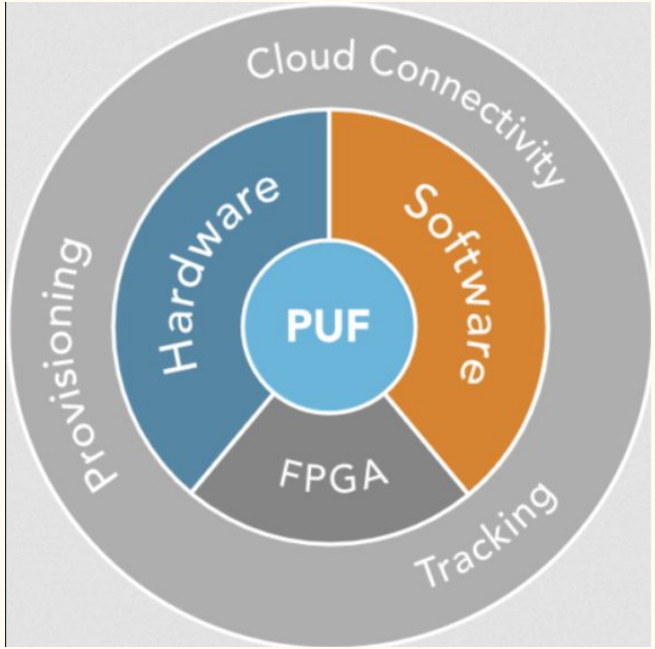

PUF and its applications

- A PUF generates a unique signature or identifier for a device by exploiting random variations in the physical properties of the device.
- They rely on the inherent randomness and variability of the physical characteristics of the components.
- PUFs are used in a variety of applications, including secure key generation and storage, device authentication, and secure bootstrapping of systems.

Types of PUFs

A. Timing Based PUFs :

Timing based PUFs include, among others, ring oscillator and arbiter PUFs.

These implementations evaluate the intrinsic timing behavior of logic cells inside the circuit. All timing based PUFs require additional dedicated circuitry for their realization.

B. Settling State Based PUFs :

Settling state based PUFs utilize bistable circuits such as registers, flip-flops or SRAM cells. The most dense implementation is the SRAM PUFs as no additional circuitry is required apart from the bistable circuit and the addressing logic.

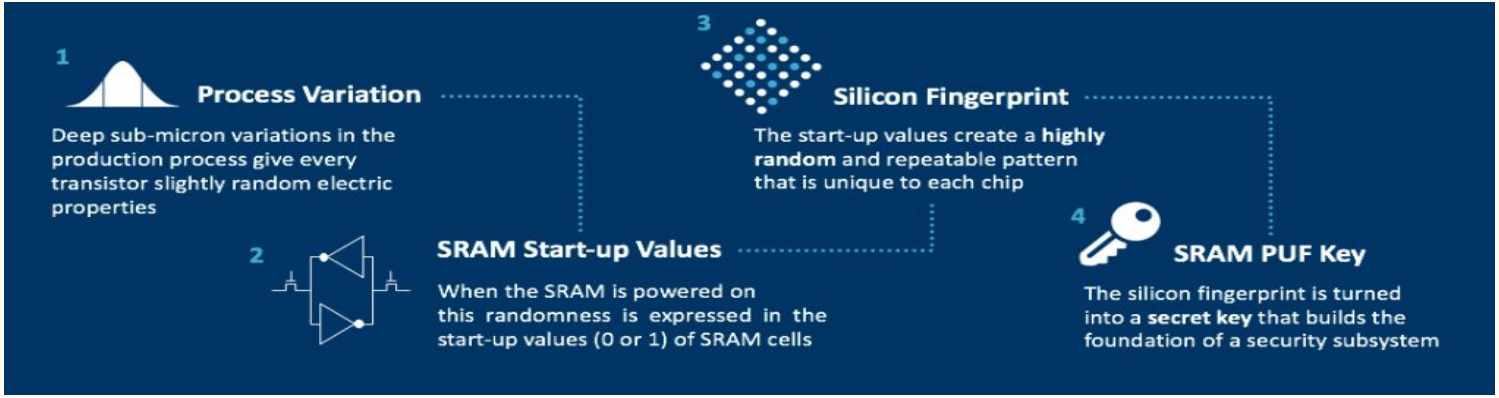

Motivation

- SRAM based PUFs are a promising technology for generating unique and secure keys that can be used for authentication and encryption purposes.

- We wanted to explore the analog properties of SRAM based PUFs as we had gone through many research papers but all those were mainly based on digital properties of SRAM based PUFs.

LTspice and Process Variations

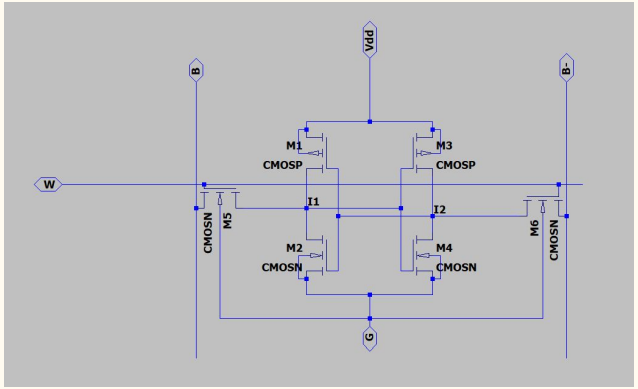


```
[2]: import numpy as np
     from io import StringIO
     import sys

[14]: sourceFile = open('params.txt', 'w')
      sourceFile.write("")
      sourceFile.close()

      sourceFile = open('params.txt','a')
      print(".params ",end="",file=sourceFile)
      for i in range(1,95,3):

          ln = np.random.normal(180,10)
          wn = np.random.normal(240,10)
          print("L",i,"=",ln,"n W",i,"=",wn,"n",sep="",end = " ",file=sourceFile)
          # l = np.random.normal(180,10)
          # w = np.random.normal(240,10)
          # print("l",i+1,"=",l,"n W",i+1,"=",w,"n",sep="",end = " ")

          lp = np.random.normal(180,10)
          wp = np.random.normal(480,10)
          print("L",i+1,"=",lp,"n W",i+1,"=",wp,"n",sep="",end = " ",file=sourceFile)
          # l = np.random.normal(180,10)
          # w = np.random.normal(480,10)
          # print("l",i+1,"=",l,"n W",i+1,"=",w,"n",sep="",end = " ")

      sourceFile.close()
```

```
.params L1=169.92904012189257n W1=213.83435764153134n L2=182.07681035797972n W2=503.23969736747864n L4=178.59818468795402n W4=244.91254286877074n L5=190.02616074613798n
W5=478.2794152569364n L7=160.9965344624652n W7=243.87617758268783n L8=179.84759878873277n W8=510.20437270794116n L10=187.35046662961258n W10=231.35340445919974n L11=181.33540445919974n
W11=487.60312362532266n L13=162.30806297494456n W13=244.50905071795134n L14=190.73231814951615n W14=498.34396755440047n L16=190.22666363335625n W16=245.90006210498882n
L17=164.31187709583915n W17=471.53746404568244n L19=176.33096195886802n W19=233.47220574236655n L20=178.67578437079638n W20=467.62770387514666n L22=179.92140061240255n
W22=236.98447004969913n L23=184.64818703523193n W23=469.62115015264494n L25=161.27942362065772n W25=251.57364072076967n L26=183.7049277069037n W26=486.18858697973925n
L28=194.00325180051112n W28=259.96310409293938n L29=170.56521453789034n W29=472.40741607111556n L31=192.65615368471566n W31=244.03739934351552n L32=167.92334838786024n
W32=496.64569644482575n L34=200.79154674766002n W34=243.1898643858894n L35=176.24621564679228n W35=473.1225212014849n L37=172.20956945102884n W37=221.20484941040598n
L38=195.4816829268819n W38=479.40459644405707n L40=176.5827088722547n W40=260.25615677793775n L41=194.13137806318073n W41=472.1357039796227n L43=175.35484558385502n
W43=234.31073374427734n L44=189.2340873869201n W44=469.1192512660873n L46=184.4838243601699n W46=245.89983303185414n L47=164.3091324040925n W47=496.89222511149943n L49=174.62506653928025n
W49=250.86311075586812n L50=197.81019710375588n W50=485.32858182093327n L52=176.92019186439947n W52=231.19519889550577n L53=181.01908555617703n W53=484.2002382862256n
L55=204.86023592106986n W55=237.93146125333055n L56=175.0876623169821n W56=491.88523072205777n L58=170.99250528896033n W58=248.12902808179973n L59=182.1955051494745n
W59=499.15715535463426n L61=190.90559678296933n W61=235.85471787790652n L62=181.20130447706026n W62=498.1394335286517n L64=188.09461997745112n W64=224.9161137151425n
L65=175.80078735783928n W65=487.80350343024333n L67=178.21572953973362n W67=236.22279219883318n L68=157.37741772828894n W68=467.17431940662 3n L70=162.83326576057883n W70=258.7457149168198n
L71=177.2433077687344n W71=493.39676084410354n L73=191.39700432268194n W73=245.88288527206092n L74=193.7723238152806n W74=487.76255998885954n L76=184.09736859189871n
W76=265.24582422656323n L77=199.50696559399572n W77=467.00562576693113n L79=171.51088996012544n W79=251.16942793090043n L80=196.01613805257256n W80=466.30500391816986n
L82=193.53664529430904n W82=235.58546630930266n L83=171.22562456671094n W83=469.72993659886566n L85=173.55294279982732n W85=261.54819004440093n L86=173.60397523268267n
W86=483.2768572775883n L88=185.23705401505177n W88=237.866453729108n L89=176.44322537960508n W89=479.25963911199959n L91=189.73532244349445n W91=243.82897162329138n
L92=179.20914951614134n W92=468.26182161598615n L94=177.48185078387635n W94=251.22081009714682n L95=177.68202258448514n W95=475.94142183773795n
```

```
.params L1=184.44349957883935n W1=244.14741078971844n L2=181.67651401208994n W2=474.40943109046452n L4=178.729809582446n W4=239.66306405304036n L5=185.38223930750127n
W5=472.5686458298388n L7=181.44863663001908n W7=245.28905358692333n L8=166.68565499722249n W8=475.52797886350095n L10=197.1973941454877n W10=243.32279680752697n L11=159.82819344465602n
W11=498.44058892908527n L13=186.12554650030964n W13=245.04239402241586n L14=169.85224262378995n W14=487.6837170547393n L16=201.74321202323077n W16=249.71229968378276n
L17=191.63737282047077n W17=473.53534104448897n L19=190.88024284945297n W19=232.79319478724338n L20=182.93427761433236n W20=477.41381151142986n L22=182.474810175541n
W22=236.12035977232023n L23=190.52374286798084n W23=497.09247010803347n L25=174.53490580272248n W25=246.44451118480998n L26=171.13388725858053n W26=480.52985403947n
L28=179.0530785746175n W28=243.97539806525705n L29=175.89879098817752n W29=474.58807411427375n L31=179.01255638109637n W31=224.15181977877197n L32=204.00564188365377n
W32=480.05426127413 93n L34=164.44757764094234n W34=242.69364008972954n L35=189.46823987763666n W35=477.53499107586 7n L37=182.05124323366 1n W37=222.03753479982473n L38=179.39214364491738n
W38=478.79160174365705n L40=171.5308804907858n W40=244.60162207019414n L41=179.40284061350923n W41=487.88345494894 1n L43=185.25532600370093n W43=239.64803021966 97n
L44=189.59799702910706n W44=472.98154454427534n L46=191.30928529132063n W46=218.53017331262305n L47=178.94562794586156n W47=468.59209097002895n L49=174.94512049607124n
W49=239.00076547613 04n L50=195.02964260219n W50=488.78015859450113n L52=181.81777616601806n W52=240.23278929911268n L53=166.54437501735245n W53=466.55720632351 9n L55=187.90036977027341n
W55=241.12808782706483n L56=184.25584979764062n W56=468.64975151108976n L58=181.74614837407356n W58=229.20575603309737n L59=183.2372596565369n W59=479.75022054911744n
L61=179.14285105128056n W61=241.98089440093432n L62=163.67127202451064n W62=494.36029821005326n L64=179.59956161626717n W64=235.46978962525102n L65=175.9665127238839n
W65=483.70950227489493n L67=189.32337776017 21n W67=250.37683848100397n L68=178.60647992630535n W68=463.34549454535511n L70=194.36817582260 54n W70=241.24723700066465n
L71=176.20161208773638n W71=471.40610057879735n L73=188.37577264687604n W73=237.80202657021027n L74=188.48452141057916n W74=475.95457603683565n L76=170.34039564487 33n
W76=237.56736749724 29n L77=176.21108597888858n W77=484.51724566919952n L79=175.57023263452888n W79=245.53846481896213n L80=181.06370703605617n W80=453.74663913092417n
L82=170.96296269122593n W82=235.36710002676 81n L83=189.58935532342173n W83=475.35934176826961n L85=175.47680346477 69n W85=239.72553926892033n L86=190.23708818449842n
W86=474.30450596912675n L88=178.92164534549 4n W88=226.09006432895478n L89=185.94274342257467n W89=493.48104760864 17n L91=168.44962057855054n W91=230.90794928490814n
L92=184.58187155010816n W92=478.08536146094 54n L94=162.60682549305503n W94=246.86106940338132n L95=174.27415784727663n W95=473.89666139015276n
```

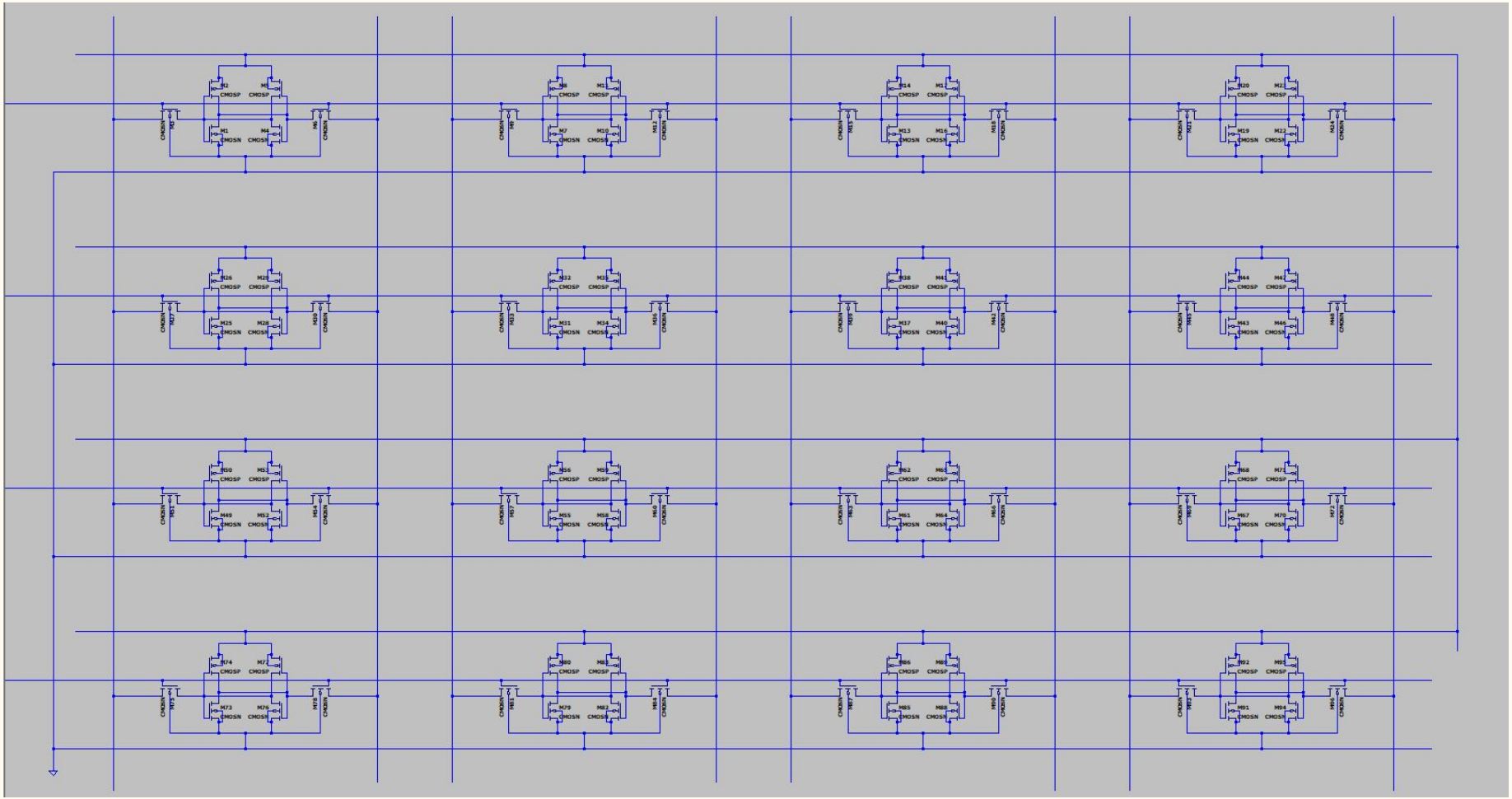

Key Generation

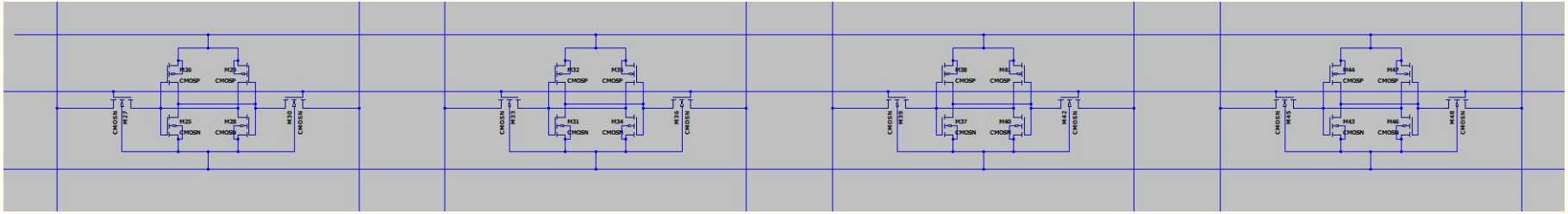

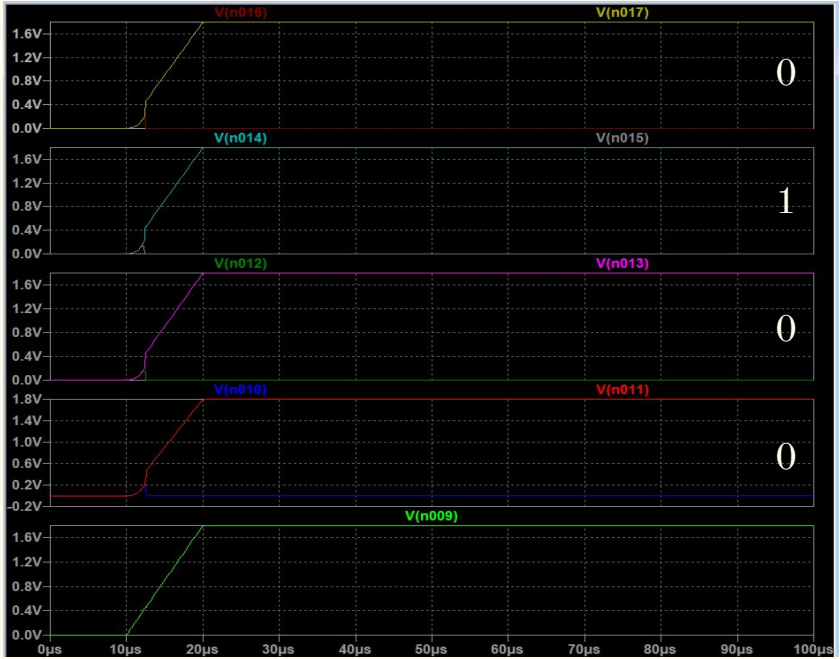

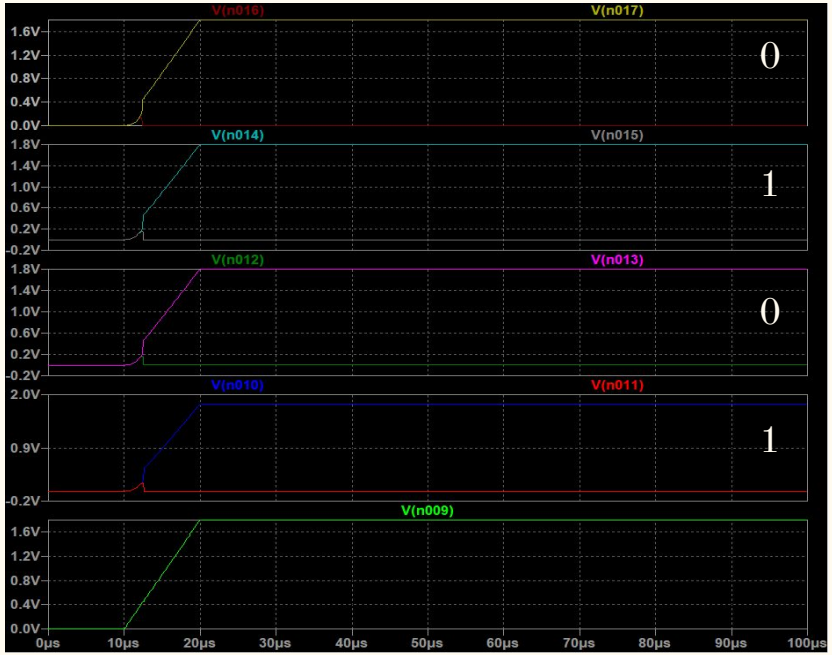

C-R Pairs

C - {(Wi,Ci),(Wj,Ci)} R - {0/1}
C1 = {(1,1),(2,1)} R = {1}
C2 = {(2,2),(1,2)} R = {1}

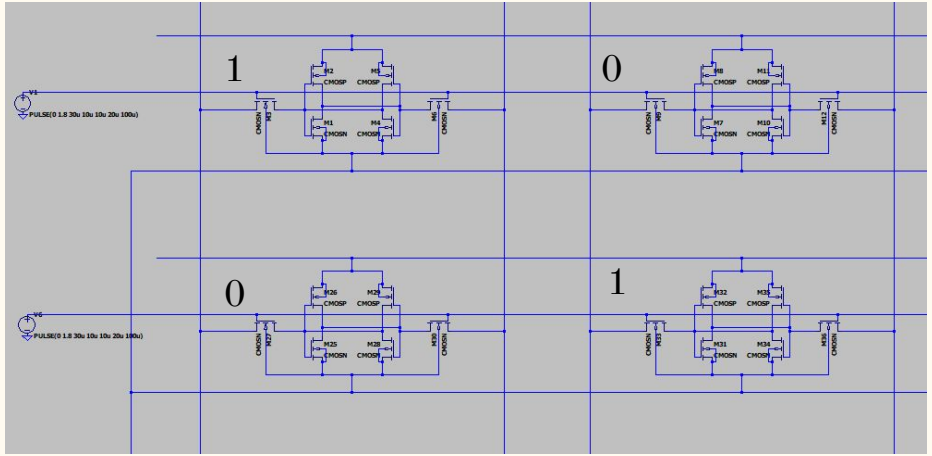

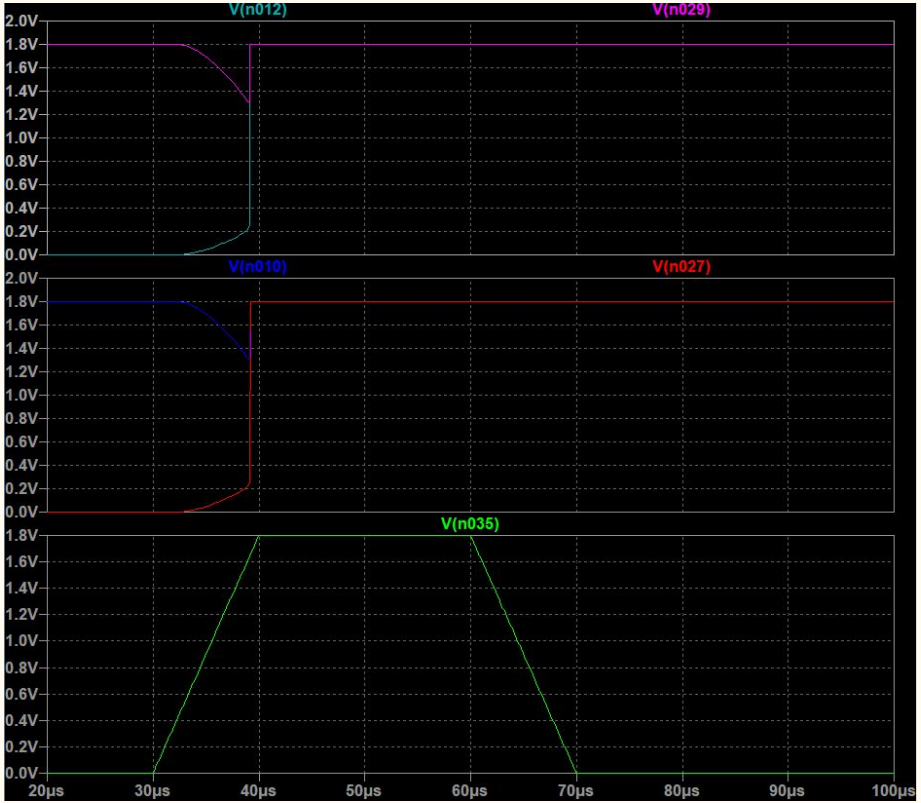

PUF based on Analog properties

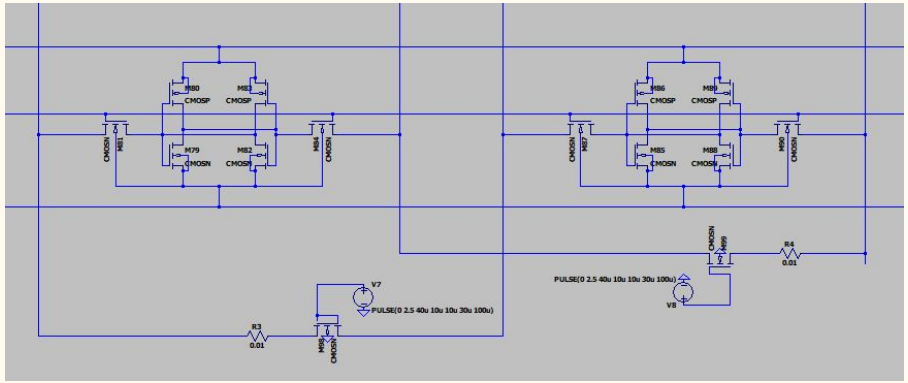

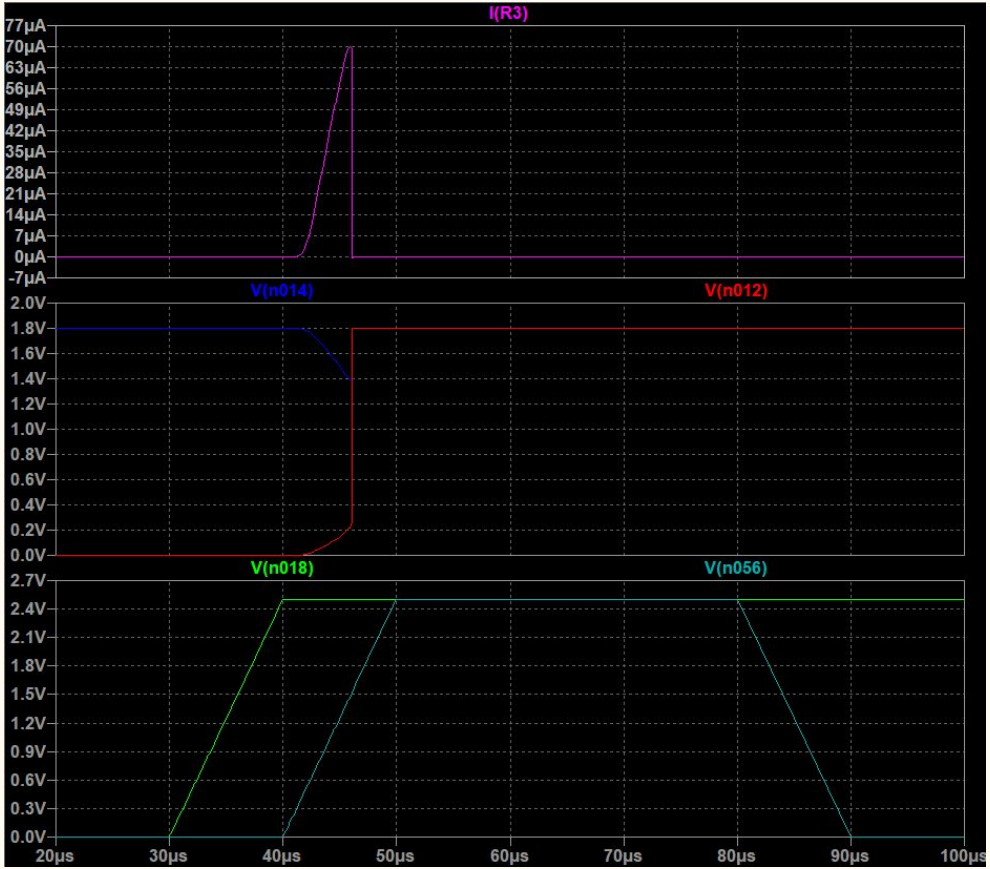

PUF based on Analog properties

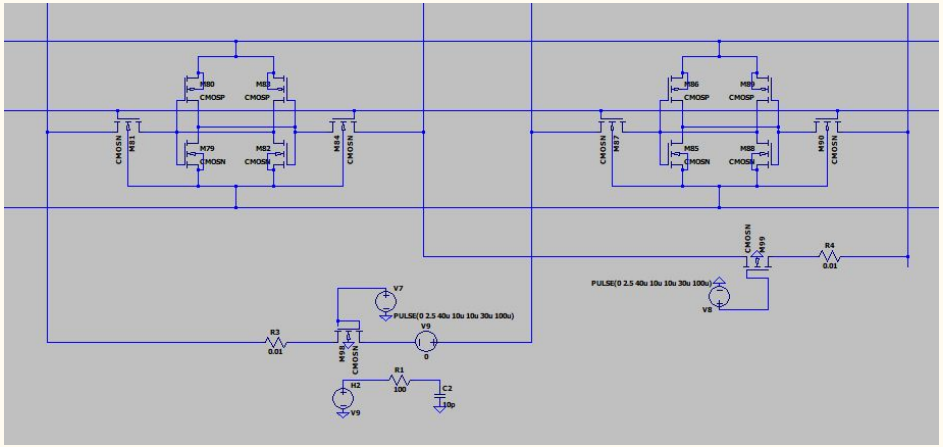

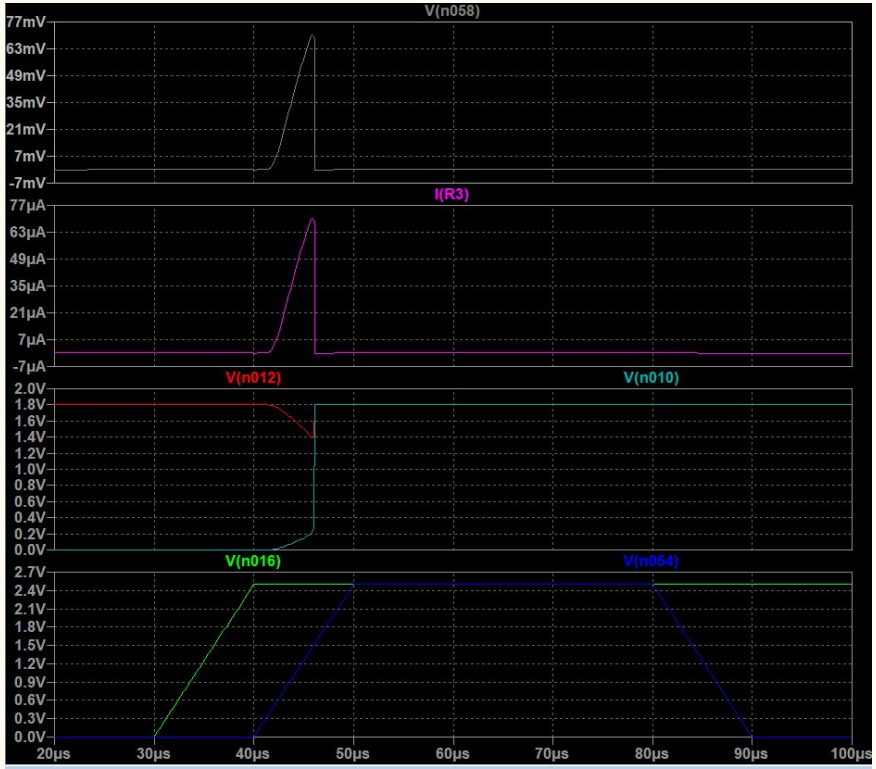

Conclusion

- SRAM PUFs are based on the inherent variations in the physical properties of SRAM cells, which makes them a promising technology for generating unique and unclonable keys.
- SRAM PUFs have several advantages over other key generation techniques, such as being low-cost, easy to integrate, and resistant to attacks such as reverse engineering and side-channel attacks.
- SRAM PUFs making use of its analog properties opens up many new possibilities.

Future Work

- SRAM PUFs based on analog properties faces some challenges, such as reliability issues due to aging, temperature variations, and voltage fluctuations.
- We can develop new methods to extract and analyze PUF responses based on these analog properties

References

- Memory-based Arbiter PUF: A Novel Highly Reliable and Scalable Strong PUF Design
- A sub-threshold SRAM based PUF | IEEE Conference Publication
- A sequence dependent challenge-response PUF using 28nm SRAM 6T bit cell | IEEE Conference
- Physical Vulnerabilities of Physically Unclonable Functions

Thank you!